REV.	DESCRIPTION	DATE
A	NEW DRAWING	11/29/2005

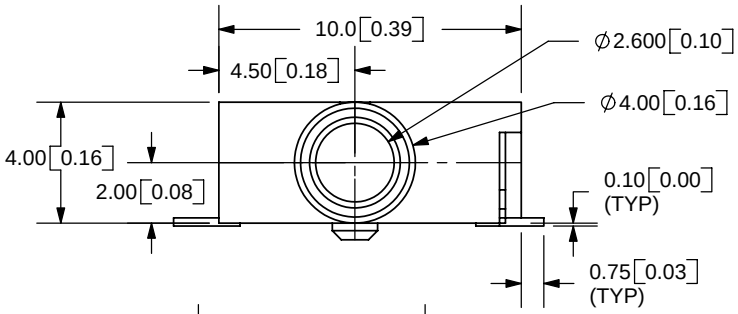

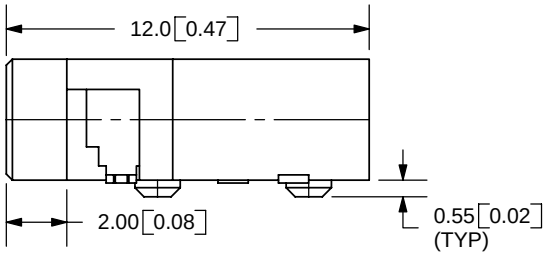

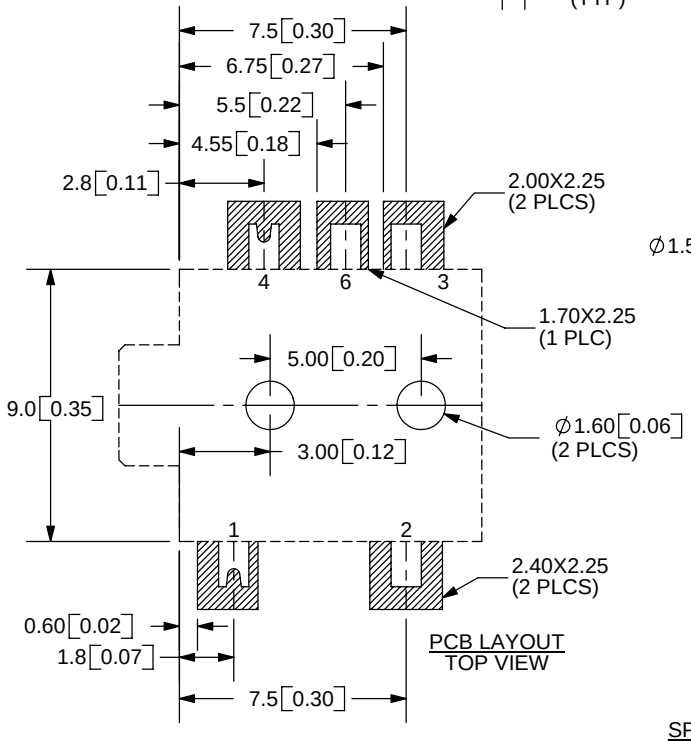

PCB LAYOUT
TOP VIEW

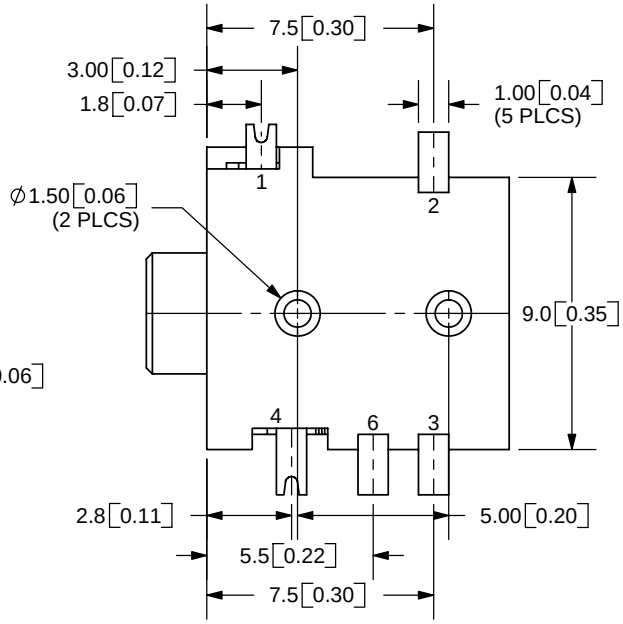

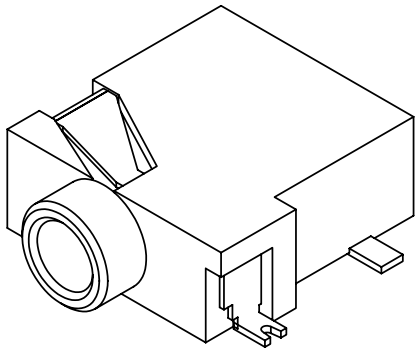

TOLERANCE:
X.X ±0.2mm
X.XX ±0.1mm
X.XXX ±0.05mm

RoHS

SPECIFICATIONS:
RATING: 16V DC @ 300mA
CONTACT RESISTANCE: 30m OHMS MAX
INSULATION RESISTANCE: 50M OHMS MIN: 500V DC
VOLTAGE WITHSTAND: 500V AC R.M.S. FOR 1 MINUTE
LIFE: 5,000 CYCLES

MODEL NO.	SJ1-42515RS-SMT
SCHEMATIC	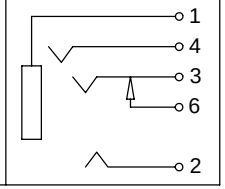

	MATERIAL	PLATING
TERMINAL 1	Copper Alloy	Gold
TERMINAL 2	Copper Alloy	Gold
TERMINAL 3	Copper Alloy	Gold
TERMINAL 4	Copper Alloy	Gold
TERMINAL 6	Brass	Gold
HOUSING	PA6T	

CUI INC
9615 SW Allen Blvd., Ste. 103
Beaverton, OR 97005
Phone: 503-643-4899
800-275-4899
Fax: 503-372-1266
Website: www.cui.com

TITLE: SMT AUDIO JACK W/4 CONDUCTORS 2.5mm	REV: A
PART NO. SJ1-42515RS-SMT	UNITS: MM [INCHES]
DRAWN BY: ZRJ	APPROVED BY:
SCALE: 4:1	

PC FILE NAME: SJ1-42515RS-SMT

COPYRIGHT 2006 BY CUI INC.