REV.	DESCRIPTION	DATE
A	NEW DRAWING	11/11/2005

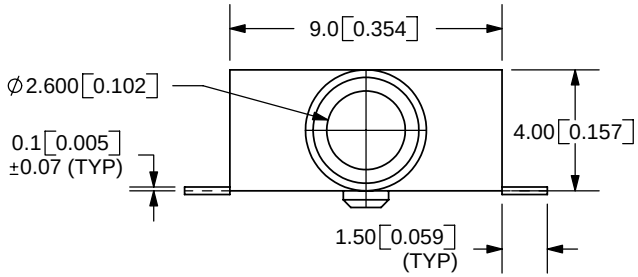

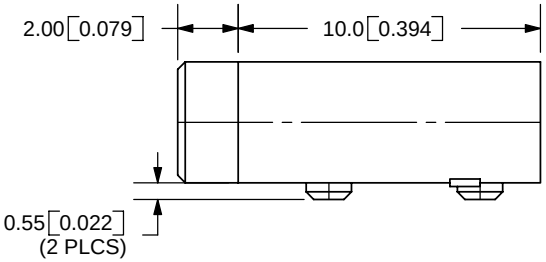

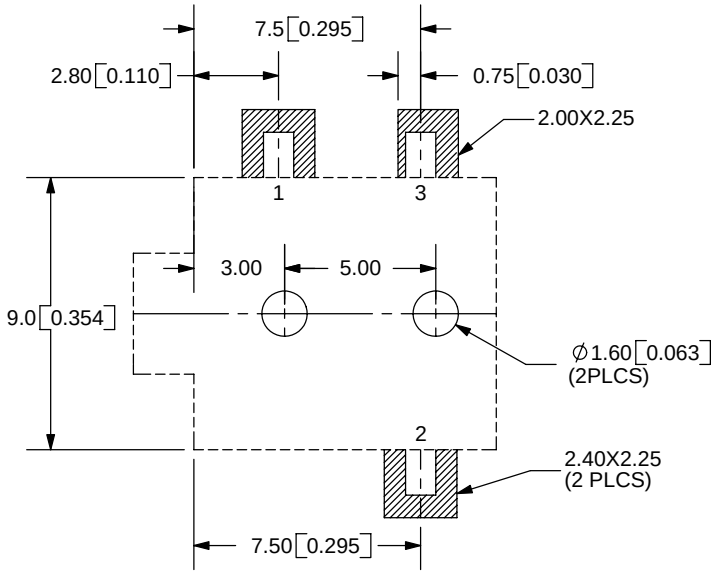

PCB LAYOUT
TOP VIEW

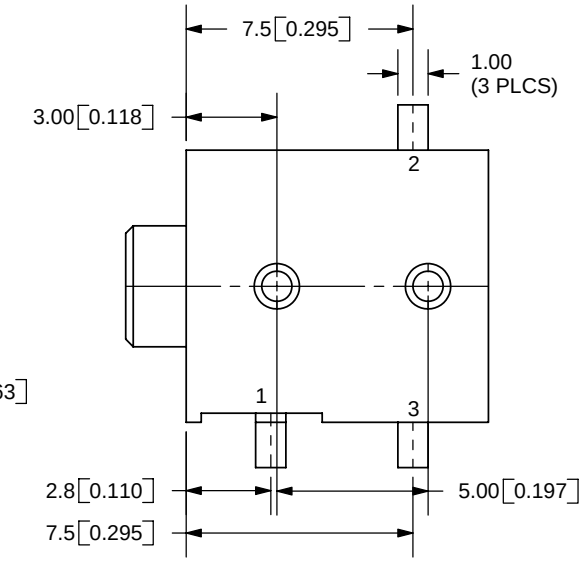

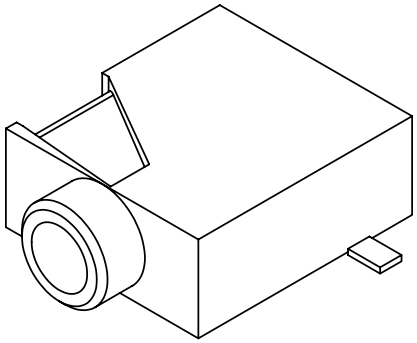

TOLERANCE:
X.X ±0.2mm
X.XX ±0.1mm
X.XXX ±0.05mm

RoHS

MODEL NO.	SJ1-2513-SMT
SCHEMATIC	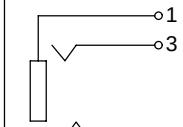

SPECIFICATIONS:
RATING: 12V DC @ 1A
CONTACT RESISTANCE: 30m OHMS MAX
INSULATION RESISTANCE: 50M OHMS MIN: 500V DC
VOLTAGE WITHSTAND: 500V AC R.M.S. FOR 1 MINUTE
LIFE: 5,000 CYCLES

	MATERIAL	PLATING
TERMINAL 1	Copper Alloy	Gold
TERMINAL 2	Copper Alloy	Gold
TERMINAL 3	Copper Alloy	Gold
HOUSING	PA6T	

CUI INC
9615 SW Allen Blvd., Ste. 103
Beaverton, OR 97005
Phone: 503-643-4899
800-275-4899
Fax: 503-372-1266
Website: www.cui.com

TITLE: 2.5mm SMT AUDIO JACK-STEREO		REV: A
PART NO. SJ1-2513-SMT		UNITS: MM [INCHES]
DRAWN BY: ZRJ	APPROVED BY:	SCALE: 4:1

PC FILE NAME: SJ1-2513-SMT

COPYRIGHT 2005 BY CUI INC.