REV.	DESCRIPTION	DATE
A	NEW DRAWING	12/19/2005
B	Added dimensions	4/3/2006
C	Updated material list	5/15/2006

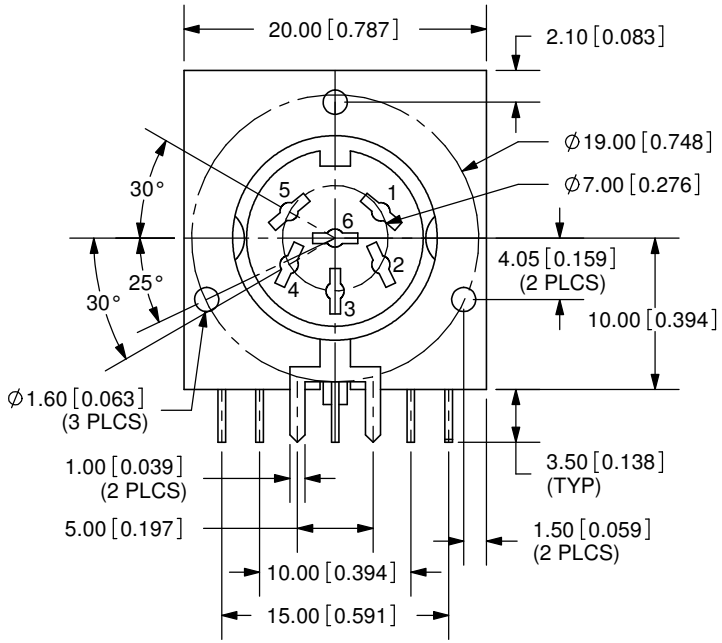

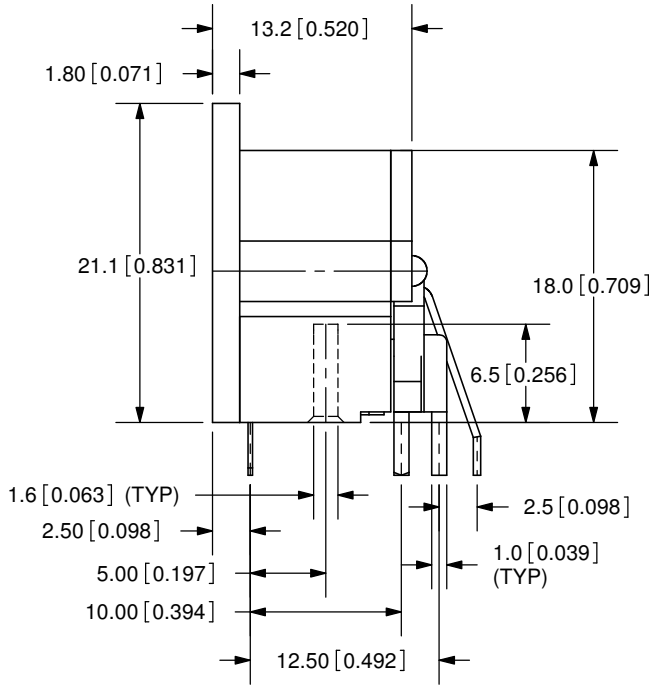

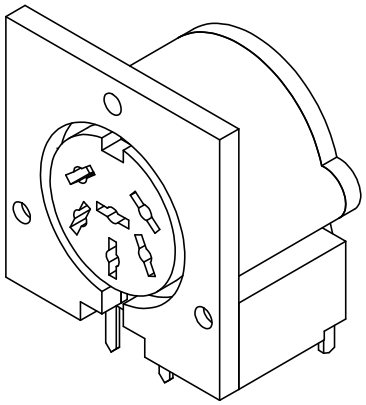

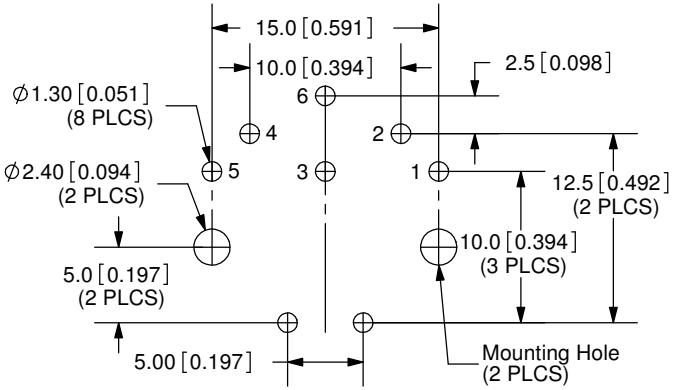

PCB LAYOUT
TOP VIEW

TOLERANCE:
X.X ±0.2mm
X.XX ±0.1mm
X.XXX ±0.05mm

SPECIFICATIONS:
RATING: 24V DC @ 1A; 100V AC @ 2A
CONTACT RESISTANCE: 20m OHMS MAX
INSULATION RESISTANCE: 100M OHMS MIN: 500V DC
VOLTAGE WITHSTAND: 500V AC R.M.S. FOR 1 MINUTE
INSERTION FORCE: 5.0KG MAX
WITHDRAWAL FORCE: 1.0KG~3.5KG
LIFE: 5,000 CYCLES

	MATERIAL	PLATING
EARTH TERMINAL	Phosphor Bronze	Tin
TERMINALS (1-6)	Brass	Tin
HOUSING	PBT	

CUI INC
20050 SW 112th Ave.
Tualatin, OR 97062
Phone: 503-612-2300
800-275-4899
Fax: 503-612-2383
Website: www.cui.com

TITLE: STANDARD CIRCULAR CONN. w/o SHIELD
REV: C
PART NO. SDS-60J
UNITS: MM [INCHES]
DRAWN BY: ZRJ
APPROVED BY:
SCALE: 2:1

PC FILE NAME: SDS-60J

COPYRIGHT 2007 BY CUI INC.