THIS COPY IS PROVIDED ON A RESTRICTED BASIS AND IS NOT TO BE USED IN ANY WAY DETRIMENTAL TO THE INTERESTS OF PANDUIT CORP.

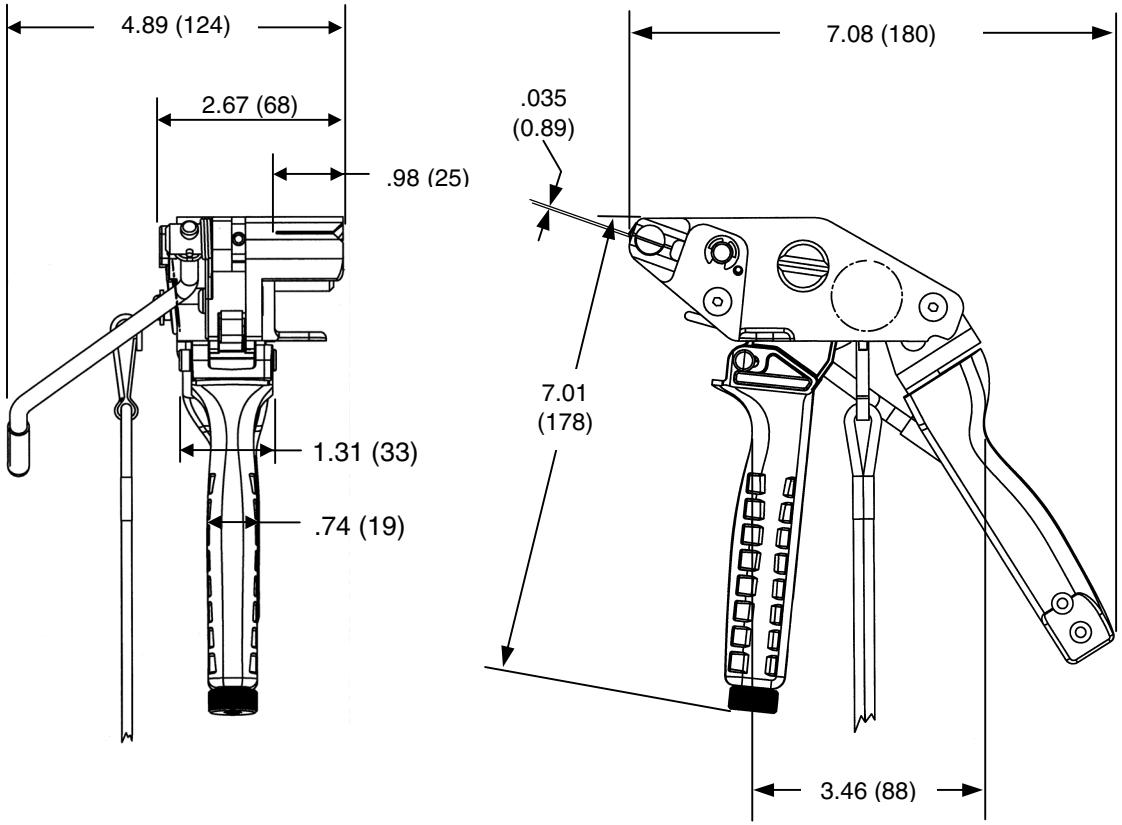

NOTES, UNLESS OTHERWISE SPECIFIED:
PANDUIT TOOL NUMBER RT1HT IS USED TO INSTALL COATED & UNCOATED *PAN-STEEL* MLTEH, MLTEH15 AND MLTSH TIES.

THIS TOOLS' FEATURES INCLUDE:

- Single handle trigger for fast installation
- Cable tie side entry for immediate positioning of tie and tool
- Adjustable controlled or Installer controlled tension
- Cut-off capability with the cutter and cutter handle
- Easy removal of excess tie
- Multi-position rear handle allows access to tight areas.
- Features to release & remove tie from tool before cutting.

CABLE TIE CROSS-SECTION CODE:
MLTEH MLTEH15 MLTSH

TOOL WEIGHT: 2.5 lbs. (40 oz.)
Dimensions shown in parenthesis are metric.

F:\wrkgrp\rvusers\ENGR DOCS-NEW\
CUSTDWG/TM24905A01_01 RT1HT.doc

REV	DATE	BY	CHK'D	DESCRIPTION	ECN	-R	CUST	SUP
01	10-4-04	BLR	ABJ	CHNG LOCKOUT SET SCR; MOVE LANYARD	4143		DLWE	
00	8-03-04	BLR	ABJ	RELEASED	4133	--	DLWE	

PANDUIT CORP. TINLEY PARK, ILLINOIS

RT1HT CUSTOMER DRAWING

UNLESS OTHERWISE SPECIFIED, DIMENSIONAL TOLERANCES ARE:
(.x) ± --- (.xxx) ± ---
(.xx) ± --- ANGLES ± ---

UNLESS OTHERWISE SPECIFIED, ALL DIMENSIONS ARE GIVEN IN INCHES, THIRD ANGLE PROJECTION.

DRAWN BY: BLR
MATL:
SCALE NONE
DATE: 8-03-04
SHEET 1 OF 1
DRAWING NO. TM24905A01
DWG SIZE A
CHK'D: ABJ