REV.	DESCRIPTION	DATE
A	NEW DRAWING	2/2/2007

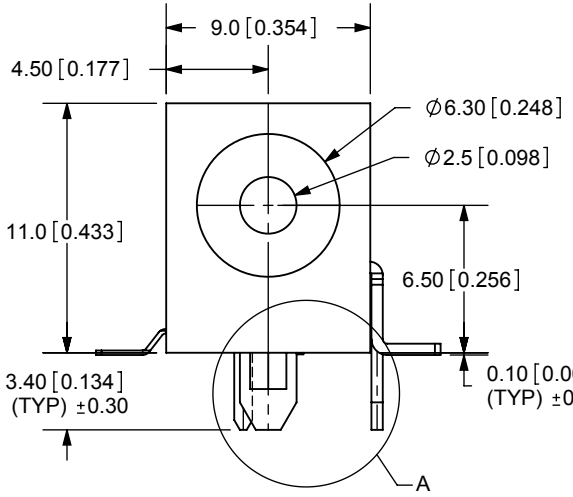

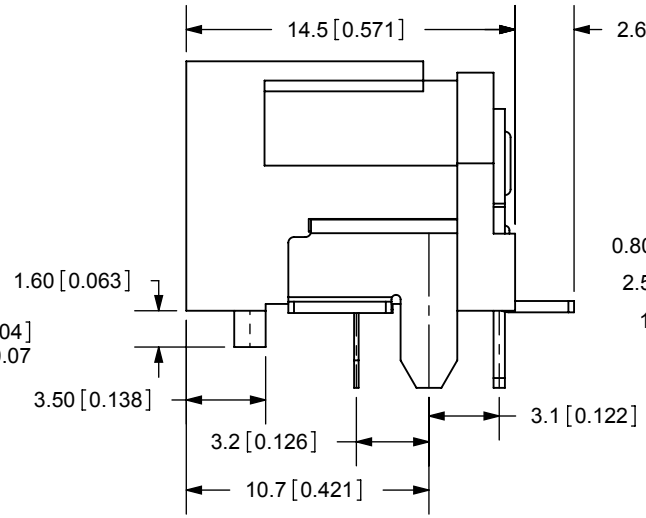

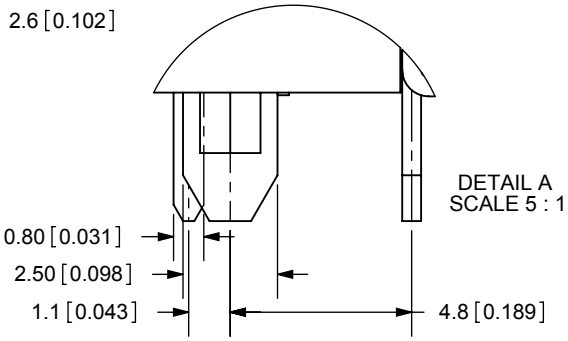

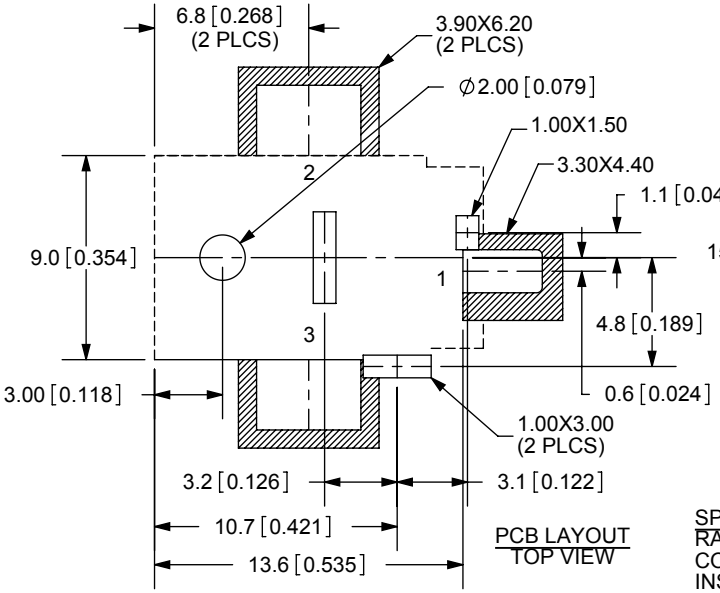

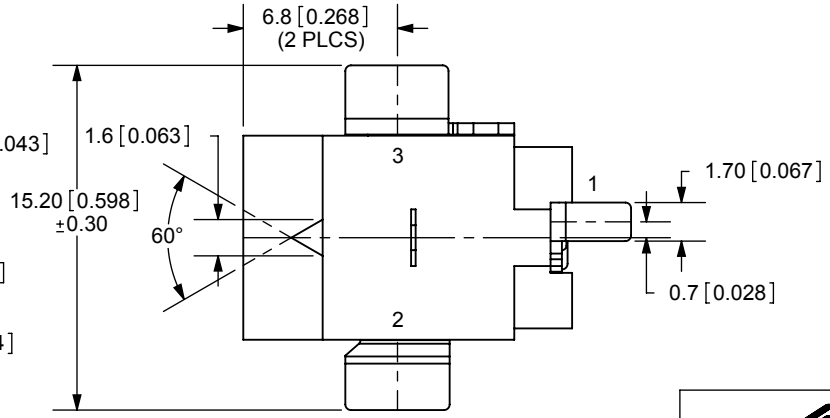

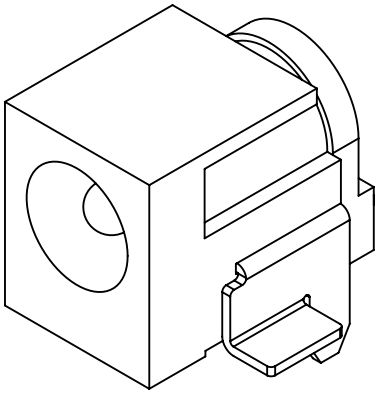

TOLERANCE:
X.X ±0.2mm
X.XX ±0.1mm
X.XXX ±0.05mm

SPECIFICATIONS:
RATING: 16V DC @ 2.5A
CONTACT RESISTANCE: 50m OHMS MAX
INSULATION RESISTANCE: 100M OHMS MIN: 500V DC
VOLTAGE WITHSTAND: 500V AC R.M.S. FOR 1 MINUTE
LIFE: 5,000 CYCLES

MODEL NO.	PJ-037BH-SMT
SCHEMATIC	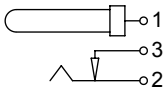

CENTER PIN DIAMETER 2.5mm Dia.

	MATERIAL	PLATING
TERMINAL 1	Brass	Silver
TERMINAL 2	Copper Alloy	Silver
TERMINAL 3	Brass	Silver
CENTER PIN	Copper	Nickel
BODY	PA6T	

CUI INC
20050 SW 112th Ave.
Tualatin, OR 97062
Phone: 503-612-2300
800-275-4899
Fax: 503-612-2383
Website: www.cui.com

TITLE: 2.5mm SURFACE MOUNT POWER JACK
REV: A
PART NO. PJ-037BH-SMT
UNITS: MM [INCHES]
DRAWN BY: ZRJ
APPROVED BY:
SCALE: 3:1

PC FILE NAME: PJ-037BH-SMT

COPYRIGHT 2007 BY CUI INC.